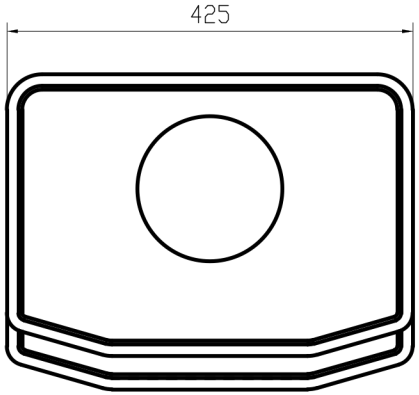

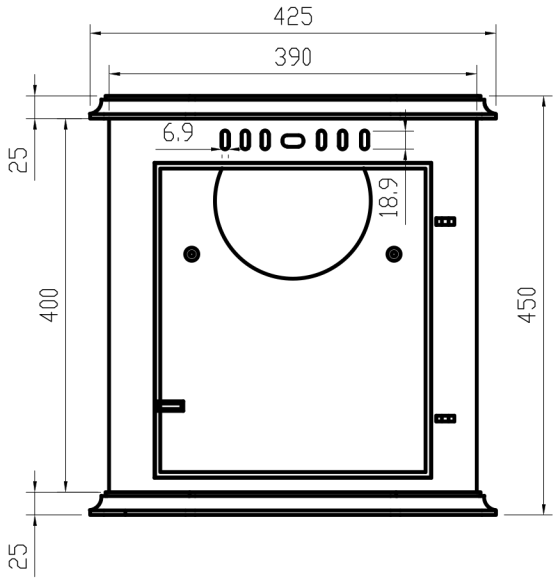

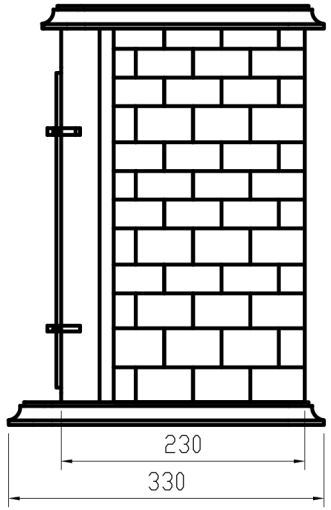

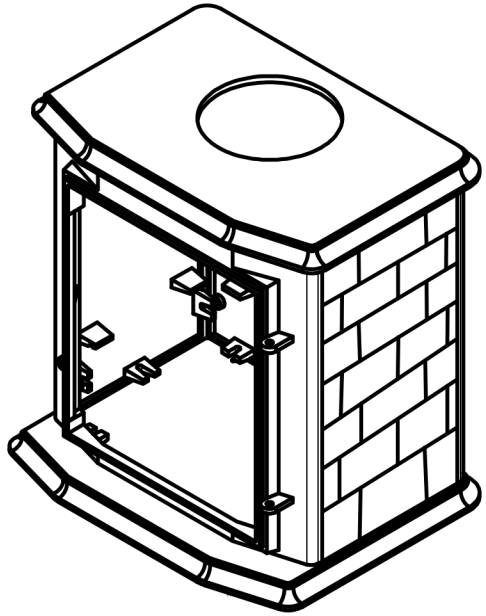

			06/04/12	0. ±1 0.0 ±0.1 0.00 ±0.01 0.000 ±0.005	**LOGFIRE SUNRAIN**
				mm	JA060